A-FRAME LAYER CAGE SYSTEM

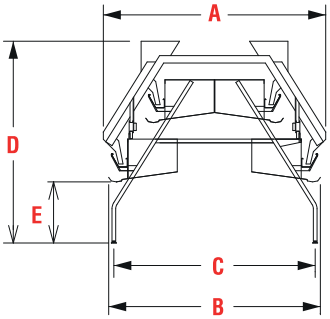

A-Frame Double Deck

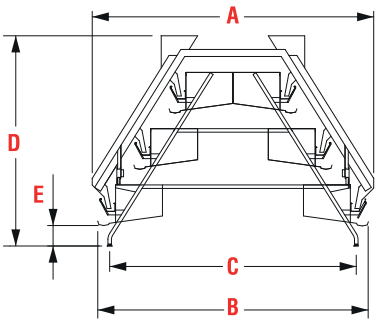

A-Frame Tri Deck

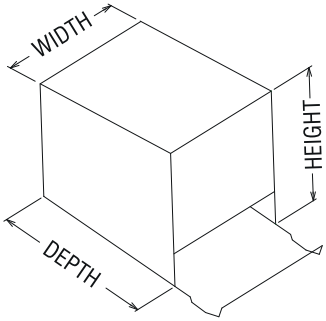

Cage Floor Area Per Bird		Birds Capacity Per Section	
		Double Deck	Triple Deck
6 Compartment	4 Birds / Cage 515.6 cm^2	96 birds	144 birds
6 Compartment	5 Birds / Cage 412.5 cm^2	120 birds	180 birds
8 Compartment	3 Birds / Cage 516.5 cm^2	96 birds	144 birds

Cage Compartment Specification		A FRAME-Double Deck	A-FRAME-Tri Deck		
Width		305mm & 406mm (12" & 16")			
Depth		508mm (20")			
Height (Front)		406mm (16")			
Cage section length		2438.4mm (96")			
Cage section specification		Standard	Standard	Extra height 14"	Extra height 19"
A	Cage width (with feed cart)	2286mm (90")	3050mm (120")		
B	Cage width (without feed cart)	2176mm (85.7")	2930mm (115.3")		
C	Center cage stand	2070mm (81.5")	2672mm (105.2")		
D	Cage height (with feed cart)	2074mm (81.7")	2278mm (89.7")	2634mm (103.7")	2761mm (108.7")
E	Cage bottom height	628mm (24.7")	222mm (8.7")	577mm (22.7")	704mm (27.7")
	Cage design	Wire material			
System length					
With feed cart + double deck & tri deck egg collector type elevator					Cage length + 4375mm (172")
With feed cart + double deck egg collector type rubber finger					Cage length + 3814mm (150")
With feed cart + tri deck egg collector type rubber finger					Cage length + 4338mm (170.8")