NAF LAYER CAGE SYSTEM

Cage Floor Area Per Bird		Birds Capacity Per Section			
		3-TIER	4-TIER	5-TIER	6-TIER
6 Compartment	**4 Birds / Cage** 515.6 cm^2	144 birds	192 birds	240 birds	288 birds
	5 Birds / Cage 412.5 cm^2	180 birds	240 birds	300 birds	360 birds

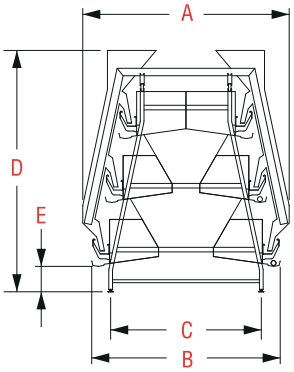

NAF 3-tier

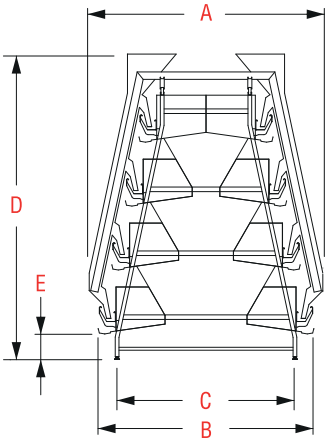

NAF 4-tier

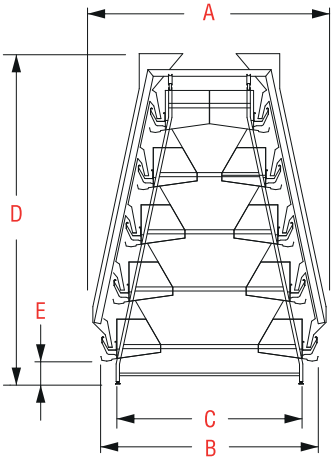

NAF 5-tier

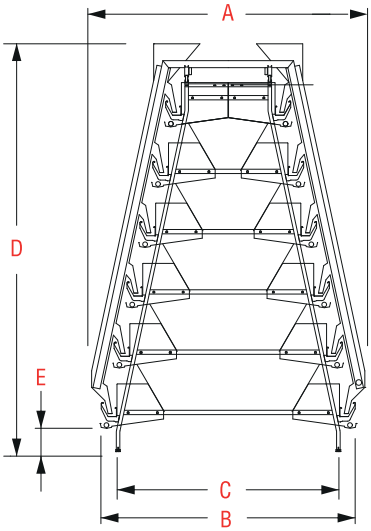

NAF 6-tier

Cage Compartment Specification		NAF - 3 Tier		NAF - 4 Tier		NAF - 5 Tier	NAF - 6 Tier
	Width	406mm (16")					
	Depth	508mm (20")					
	Height (Front)	457mm (18")					
	Cage section length	2438.4mm (96")					
	Cage section specification	With manure belt or high rise	Without manure belt	With manure belt or high rise	Without manure belt	With manure belt or high rise	Without manure belt / high rise
A	Cage width (with feed cart)	2116mm (83.3")		2394mm (94.3")		2673mm (105.2")	2951mm (116.2")
B	Cage width (without feed cart)	1932mm (76")		2210mm (87")		2489mm (98")	2767mm (108.9")
C	Center cage stand	1544mm (60.8")		1823mm (71.8")	1950mm (76.8")	2101mm (82.7")	2380mm (93.7")
D	Cage height (with feed cart)	2466mm (97")	2716mm (107")	3121mm (122.9")	3435mm (135.2")	3776mm (148.7")	4431mm (174.4")
E	Cage bottom height	253mm (10")	503mm (19.8")	253mm (10")	567mm (22.3")	253mm (10")	253mm (10")
	Cage design	Wire material					
System length							
With feed cart + egg collector type elevator + manure drive							Cage length + 4950mm (195")
With feed cart + egg collector type elevator							Cage length + 4370mm (172")